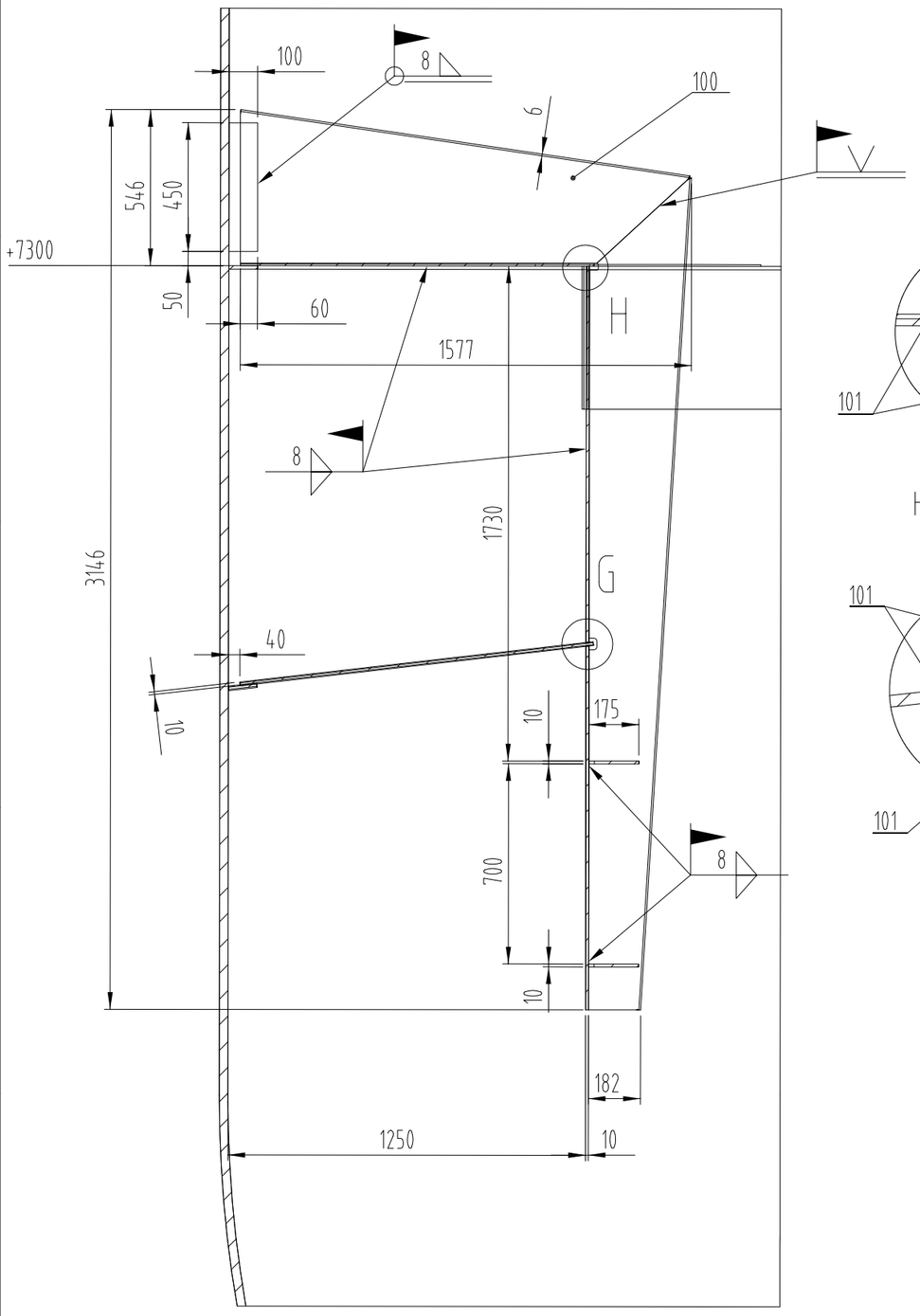

C-C (1:20)

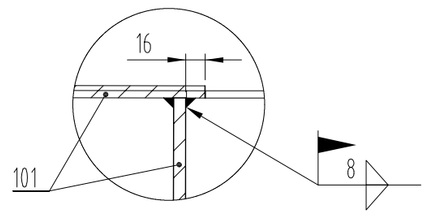

H (1:5)

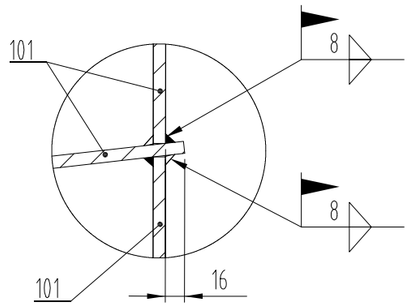

G (1:5)

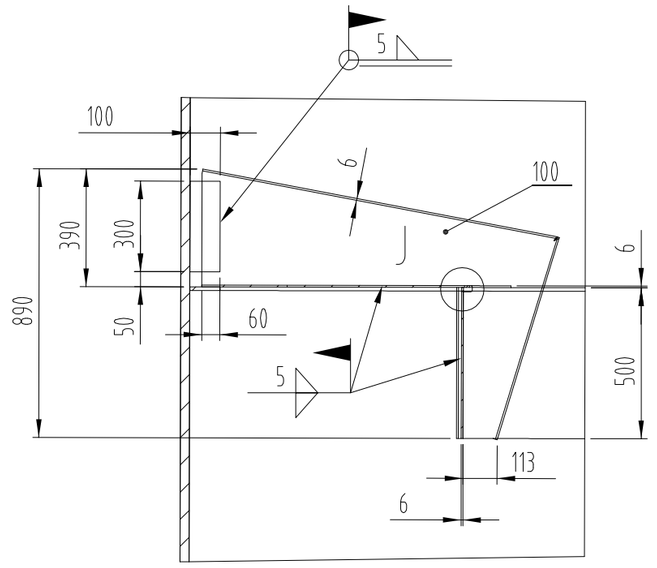

D-D (1:20)

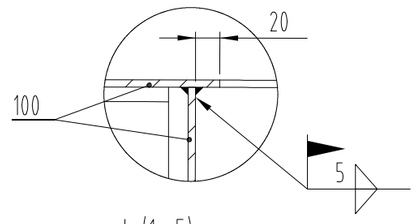

J (1:5)

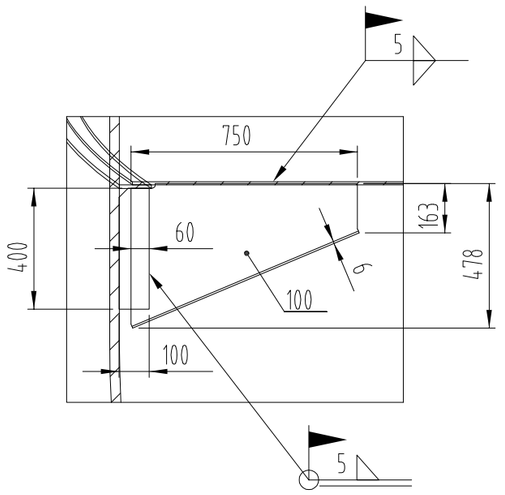

E-E (1:20)

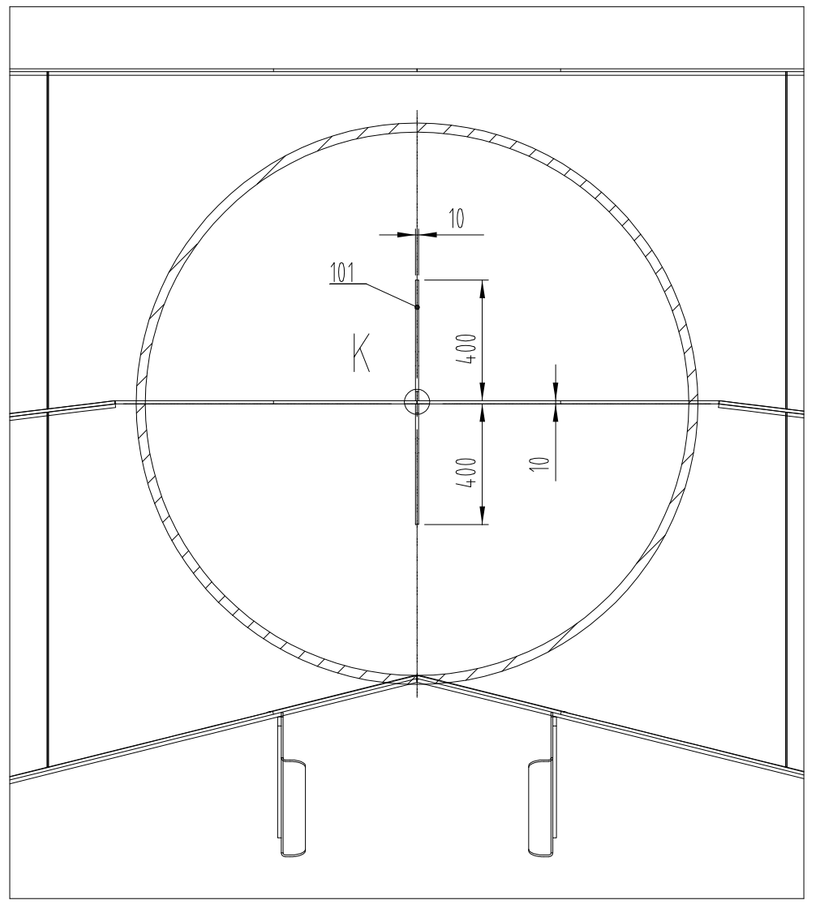

F-F (1:20)

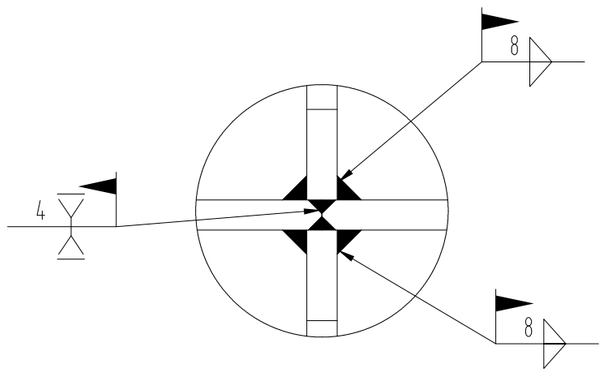

K (1:2)

Изм.	Описание	Выполнил	Дата	Проверил	Дата	Утвердил	Дата
01	Design revision	PATILDA	07.06.2011	PURANIKMA	07.06.2011	THAKAREAM	07.06.2011
00	Original Issue	GUJER_C	22.02.2011	BREITER_A	22.02.2011	KELLER_P	22.02.2011
rev	revison remarks	issued by	date	checked	date	approved	date

SAP#213933406.00108003 C | Project: 213933406 | CACNEFT | Size: A2 | scale 1:40

Sec-ID: 8600 | Customer: SALAVATNEFTEORGSINTHEZ.JS | Customer-P.O.:2139334.06

Col-No./Tag: 001/K-300 VAC | Plant/Area: | customer-dwg.:

Bed: 5 | AC | End user:

SULZER

GIVD Vane Distributor -ID 8600mm
ЛОПАТОЧНЫЙ РАСПРЕДЕЛИТЕЛЬ

drawing-no.номер чертежа 2139334-001-069-3/3

Drawing-state: стадия
CERTIFIED FINAL

This document is entrusted to the recipient personally. The copyright remains with SULZER CHEMTECH. Recipients must obtain written authority of the said company before wholly or partly use or duplicating the contents or disclosing same to others. All rights reserved.

1000089834-DRW-AC